Vendor:ACT

Exam Code:WORKKEYS

Exam Name: WorkKeys Assessment Test

Version: Demo

QUESTION 1

Each sprinkler head in a manufacturing plant\\'s sprinkler system sprays water at an average of 10 gallons per minute. If 8 sprinkler heads are flowing at the same time, how many gallons of water will be released in 5 minutes?

A. 23 gallons

B. 80 gallons

C. 90 gallons

D. 400 gallons

E. 2000 gallons

Correct Answer: D

QUESTION 2

Alec worked the following hours during one week. He is paid $10.50 per hour for the first 8 hours per day and 1 1/2 times his regular pay for any hours worked over 8 in a day. How much money did Alec earn this week?

Day	Hours Worked
Monday	6.5
Tuesday	9.0
Wednesday	10.25
Thursday	12.5
Friday	8.25

A. $126.00

B. $404.25

C. $480.63

D. $522.38

E. $530.25

Correct Answer: E

QUESTION 3

A big screen television priced at $1250 is on sale for $850. Calculate the percent savings.

A. 16%

B. 32%

C. 40%

D. 56%

E. 68%

Correct Answer: B

QUESTION 4

A landscaping firm is planning a new flower garden for display. The garden will be 15 feet by 35 feet and it will be planted with 2 flowers per square foot. The flowers cost $17.50 per flat of 125. The nursery sells only full flats. How much will it cost to plant the flower garden?

A. $122.50

B. $140.00

C. $157.50

D. $183.75

E. $223.00

Correct Answer: C

QUESTION 5

An army supply truck can carry 3 tons of food. A breakfast ration weighs 12 ounces, and the other two daily meals weigh 18 ounces each. Assuming each soldier gets 3 meals per day, on a weeklong trip, how many soldiers can be supplied by one truck?

A. 42

B. 125

C. 150

D. 285

E. 325

Correct Answer: D

QUESTION 6

A company is manufacturing the special-ordered part pictured. The company charges by the number of cubic inches of volume contained within the nut. In order to determine a fair price, you must know the volume of the part. Find the volume to the nearest whole number. (Note: The part is a cube with a cylinder deleted from its center.)

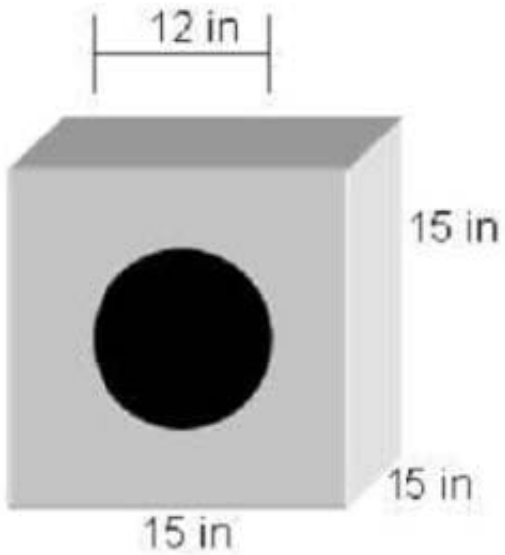

A. 840 cubic inches

B. 848 cubic inches

C. 1679 cubic inches

D. 1696 cubic inches

E. 3375 cubic inches

Correct Answer: C

QUESTION 7

Mitchell needs to find a container than can hold a large amount of water. There are various sizes from which to choose. Which of the following shapes would offer the greatest volume when filled?

A. a cube with side length of 80 feet

B. a cylinder with a diameter of 90 feet and a height of 7 feet

C. a ball with a radius of 50 feet

D. a ball with a diameter of 90 feet

E. a cylinder with a radius of 70 feet and a height of 30 feet

Correct Answer: C

QUESTION 8

Johnson Landscape is installing mulch at a site. The area of the site is 150 feet by 210 feet. The mulch will be applied to a depth of 4 inches. Red mulch costs $45.00 per cubic yard. Natural brown mulch costs $38.00 per cubic yard (mulch is only sold in whole yards). How much would the company save by using natural brown mulch?

A. $2723.00

B. $3215.00

C. $8169.00

D. $24,500.00

Correct Answer: A

QUESTION 9

A recipe calls for all the liquid ingredients to be mixed together: 2-1/4 cups of water, 4-5/8 cups of chicken stock, and 1/2 cup soy sauce. How many cups of liquid are in the recipe?

A. 6 cups

B. 6-7/8 cups

C. 7-1/4 cups

D. 7-3/8 cups

E. 7-3/4 cups

Correct Answer: D

QUESTION 10

Your interior design company has been asked to determine how many square yards of carpet are needed to cover a floor 24 feet by 30 feet. How many square yards of carpet are needed?

A. 40 square yards

B. 80 square yards

C. 240 square yards

D. 720 square yards

E. 1440 square yards

Correct Answer: B

QUESTION 11

A doctor prescribes a medicine that must be taken 3 times a day for 4 days and then twice a day for 6 days. How many tablets will the pharmacist need to fill the prescription?

A. 10

B. 12

C. 24

D. 36

E. 144

Correct Answer: C

QUESTION 12

Melinda worked the following hours during one week. She is paid $8.50 per hour for the first 40 hours of work. After 40 hours, she receives 1 ½ times her regular hourly rate. How much money did Melinda earn this week?

Day	Hours Worked
Monday	6.5
Tuesday	9.0
Wednesday	10.25
Thursday	12.5
Friday	8.25

A. $340.00

B. $395.25

C. $422.88

D. $592.88

E. $601.32

Correct Answer: C